Cosinus Slide®

STEEL QUALITY	EN 10025-2:2004 - S235JR, cold drawn NBN A 24-302 - BE 500 TS EN 10111:2008 - DD14
MATERIAL THICKNESS	2 x 5 mm (13/64”) upper Sinus waves Horizontal plates 2 x 35 x 3 mm (5/64”) 2 x 2 mm (5/64”) bottom Cosinus waves
HEIGHT ADAPTATION	Adjustable steel plate 1 x 1,5 mm (1/16”)
PROFILE LENGTH	2,60 m (+ 5 mm / - 10 mm) (8.53 ft +13/64” / - 25/64”)
JOINT OPENING	Optimal and recommended up to 15 mm (19/32”), load transfer possible up to 25 mm (1”)
ANCHORAGE	Patented, specially 3D formed rebar Ø 6 mm (15/64”) as continuous anchorage
VERSIONS	Natural steel / Galvanized / Stainless steel AISI 304 or AISI 316
PALLET SIZE	Length 2,60 m (8.53 ft), Width 1,15 m (3.77 ft), height see table

Profile Type	Slab Thickness h [mm] (inch)	Sinus a [mm] (inch)	Cosinus b [mm] (inch)	Adjust. plate c [mm] (inch)	Weight [kg/m] (lbs/ft)	Weight [kg/pc] (lbs/pc)	Quantity [pcs/pal.]	Quantity [m/pal.] (ft/pal.)	Gross Weight [kg/pal.] (lbs/pal.)	Pallet Height [m] (ft)
90/120	90 - 120 (3 35/64 - 4 23/32)	50 (1 31/32)	35 (1 3/8)	40 (1 37/64)	9,94 (6.68)	25,85 (56.99)	7 x 10 = 70	182,0 (597.1)	1860 (4101)	1,15 (3.77)
115/160	115 - 160 (4 1/2 - 6 3/8)	50 (2)	60 (2 23/64)	60 (2 23/64)	11,49 (7.72)	29,88 (65.87)	8 x 7 = 56	145,6 (477.7)	1740 (3836)	1,08 (3.54)
160/215	160 - 215 (6 3/8 - 8 1/2)	80 (3 5/32)	75 (3)	75 (3)	15,16 (10.19)	39,42 (86.92)	8 x 6 = 48	124,8 (409.5)	1950 (4300)	1,24 (4.07)
205/300	205 - 300 (8 5/64 - 11 13/16)	80 (3 5/32)	120 (4 3/4)	120 (4 3/4)	17,60 (11.83)	45,76 (100.90)	7 x 4 = 28	72,8 (238.8)	1340 (2955)	1,08 (3.54)
255/370	255 - 370 (10 - 14 9/16)	80 (3 5/32)	170 (6 11/16)	170 (6 11/16)	20,31 (13.65)	52,80 (116.40)	7 x 3 = 21	54,6 (179.1)	1160 (2557)	1,12 (3.67)
375/500*	375 - 500* (14 49/64 - 19 11/16)*	80 (3 5/32)	290 (11 27/64)	200 (7 7/8)	25,65 (17.24)	66,70 (147.05)	6 x 2 = 12	31,2 (102.4)	860 (1896)	0,95 (3.12)

For further information with regards to the installation, please consult the Cosinus Slide® installation guide. For calculations, validations and optimal use of the joints for your respective projects, please contact your local dealer or send a request to info@hcjoints.be.

* *stainless steel joint dimensions may differ*

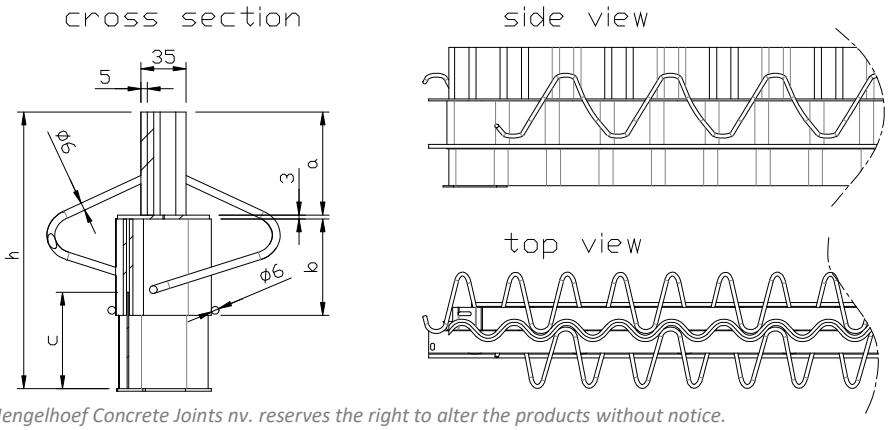

ISO 9001:2015

Document issued July 2024. Hengelhoef Concrete Joints nv. reserves the right to alter the products without notice.
©COPYRIGHT 2024 by Hengelhoef Concrete Joints nv.

HENGELHOEF CONCRETE JOINTS

Hengelhoefstraat 158, Poort Genk 0420, B-3600 Genk
T. +32 (0)89 32 39 80 · F. +32 (0)89 32 39 88
E. info@hcjoints.be

www.hcjoints.be